THINK TECH FORWARD

Stock code: 300415

Designed by YIZUMI, July 2026

YIZUMI

SpaceA
Industrial Pellet 3D Printing

Simple. Fast. Competitive

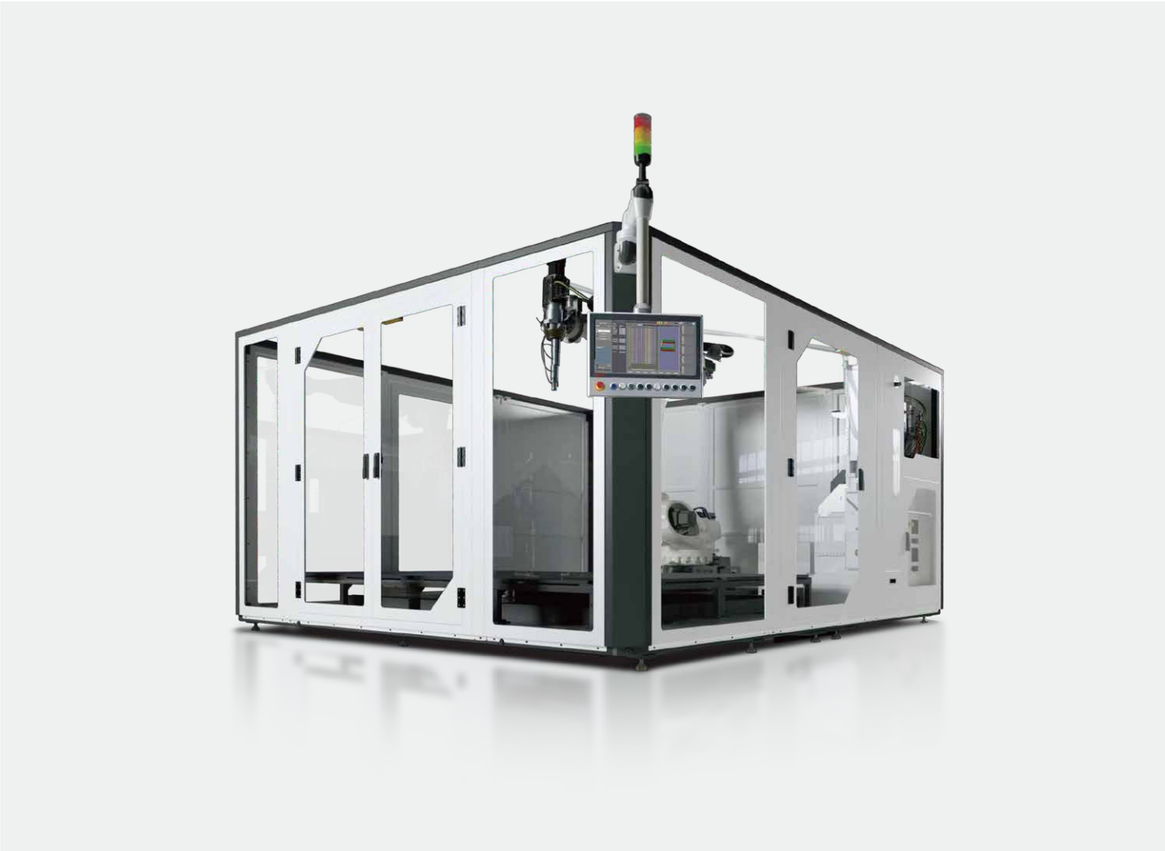

Yizumi International Business Co., Ltd.

Address: No.22-2 Ke Yuan 3rd Road, Shunde, Foshan, Guangdong 528300, China

TEL: 400-802-6888(China)　86-757-2921 9001(Overseas)

Email: imm@yizumi.com　www.yizumi.com

Yizumi Germany GmbH

Address: Konrad-Zuse-Str. 41D 52477 Alsdorf

TEL: +49 2404 96791–0

Email: sales@yizumi-germany.de　spacea.de/en/

【DISCLAIMER】

【1】YIZUMI reserves the right to modify the product description in the catalogue. Specification might be changed without prior notice.

【2】The picture in the catalogue is for reference only. The real object should be considered as final.

【3】The data in the catalogue is obtained from internal testing in YIZUMI laboratory.

Please refer to the actual machine for the final data. YIZUMI reserves the right of final interpretation upon disputes and ambiguities.

YouTube YIZUMI_Official　YIZUMI_Official

THINK TECH FORWARD

PRODUCT DETAILS

About SpaceA Gen2 Series

Development Background

Rising Demand for Scalable Pellet AM

As additive manufacturing transitions from prototyping to true industrial production, manufacturers increasingly require systems that process standard thermoplastic granulates with high throughput, stable quality, and scalable automation options. Pellet-based AM provides significantly lower material costs and dramatically higher deposition rates, positioning SpaceA Gen2 as a future-ready solution.

Need for Higher Productivity in Modern Manufacturing

Industrial users expect systems that reduce production time while increasing repeatability and process reliability. With screw-extrusion technology enabling several kilograms of throughput per hour, Gen2 addresses the market demand for high-speed, economically viable production beyond filament-based systems.

Automation and Integration as Key Market Drivers

Companies increasingly look for additive systems that seamlessly integrate into existing process chains. SpaceA's modularity, 6-axis robotics, and open industrial interfaces form the technological foundation from which Gen2 expands with even more robust automation readiness.

Broader Material Requirements Across Industries

Advanced sectors—from maritime to aviation—require stronger, lighter, chemically resistant or fiber-reinforced materials. By processing unfilled and highly filled thermoplastic pellets, Gen2 supports applications that demand high-performance engineering polymers at competitive cost.

Core Value Proposition

With modular extruders, interchangeable robots, scalable build volumes, and optional process extensions (e.g., milling, vision systems, sensor technology), Gen2 offers adaptability for manufacturers who require tailored end-to-end production cells. By combining robotics, pellet extrusion, and an industry-standard control architecture, Gen2 supports continuous production workflows — ideal for small-series manufacturing, spare-part strategies, and semi-automated production islands.

Industrial Production at Pellet AM Economics

SpaceA Gen2 empowers manufacturers to shift from small-batch experimentation to true industrial additive manufacturing by combining low material costs, high throughput, and stable process control. The result: significantly lower part costs compared to filament systems while maintaining industrial-grade performance.

Performance Upgrade Over Previous Systems

Compared to earlier pellet AM systems, SpaceA Gen2 offers improved precision, stronger process monitoring, and optimized temperature stability — crucial for demanding applications such as thick-wall parts, functional prototypes, and large components requiring dimensional consistency.

Critical Success Factors

Advanced Extrusion Technology

The single-screw extruder with integrated drying ensures stable material conditioning, high dosing accuracy, and repeatable deposition quality. Combined with improved shear-heating efficiency, Gen2 reaches high throughput levels needed for cost-effective industrial use.

Industrial-Grade Robotics and Precision

The system's 6-axis robotics achieve positioning accuracies around 0.05 mm, enabling complex geometries, smooth toolpaths, and repeatable precision — especially important for functional components and large-scale parts.

Synchronous Axis Coordination for Higher Speed and Precision

The advanced motion control architecture of the SpaceA Gen2 enables real-time synchronized interpolation between the extruder axis and all robot axes. This precise coupling ensures that material output, travel speed, and toolpath curvature remain perfectly aligned at any moment.

As a result, the system achieves:
Higher printing speeds without compromising bead geometry;

- More accurate deposition along complex 3D trajectories
- Smoother surface quality
- Improved dimensional stability, even in dynamic high-speed movements

This synchronized axis strategy is a decisive performance advantage of the Gen2 generation, enabling superior process control compared to conventional decoupled extrusion-robot systems.

For Your Moldless Series Production

SpaceA empowers manufacturers to break free from traditional tooling constraints and move directly into efficient, moldless series production. By combining pellet-based additive manufacturing with robotic motion control, SpaceA delivers consistent part quality, scalable throughput, and unmatched design freedom.

Whether you produce large structural components, customized batches, or complex geometries, SpaceA ensures reliable, repeatable results without the cost, lead time, or limitations of conventional molding.

Your production — faster, smarter, and truly moldless.

SpaceA

Advanced Robotic Pellet Additive Manufacturing

YIZUMI's SpaceA Gen2 robotic pellet additive manufacturing systems open the door for everyone to enter the economically scalable world of mold-free part production — regardless of size or shape.

With an intuitive operator interface, low-maintenance machine technology, high-speed printing modes, and a fully integrated digital workspace, SpaceA Gen2 sets a new standard for accessible and efficient industrial AM.

A 3D-Printer to make your professional live
Simple. Fast. Competetive.

A Synergy of Robotic Technology and Pellet Using

> The material which will be processed is pretreated in a dryer. This dryer is included in all standard systems. The material is fed from the dryer to the extruder.
> The extruder is a compact single-screw extruder, weighing only 9.5 kg. There thepellets are plasticized and discharged in a defined manner. The final componentcan then be produced on the construction platform by a relative movement of the positioning system.

- Best Return on Invest
- Low Material Supply Costs
- High Automation Potential
- Low Cycle Time

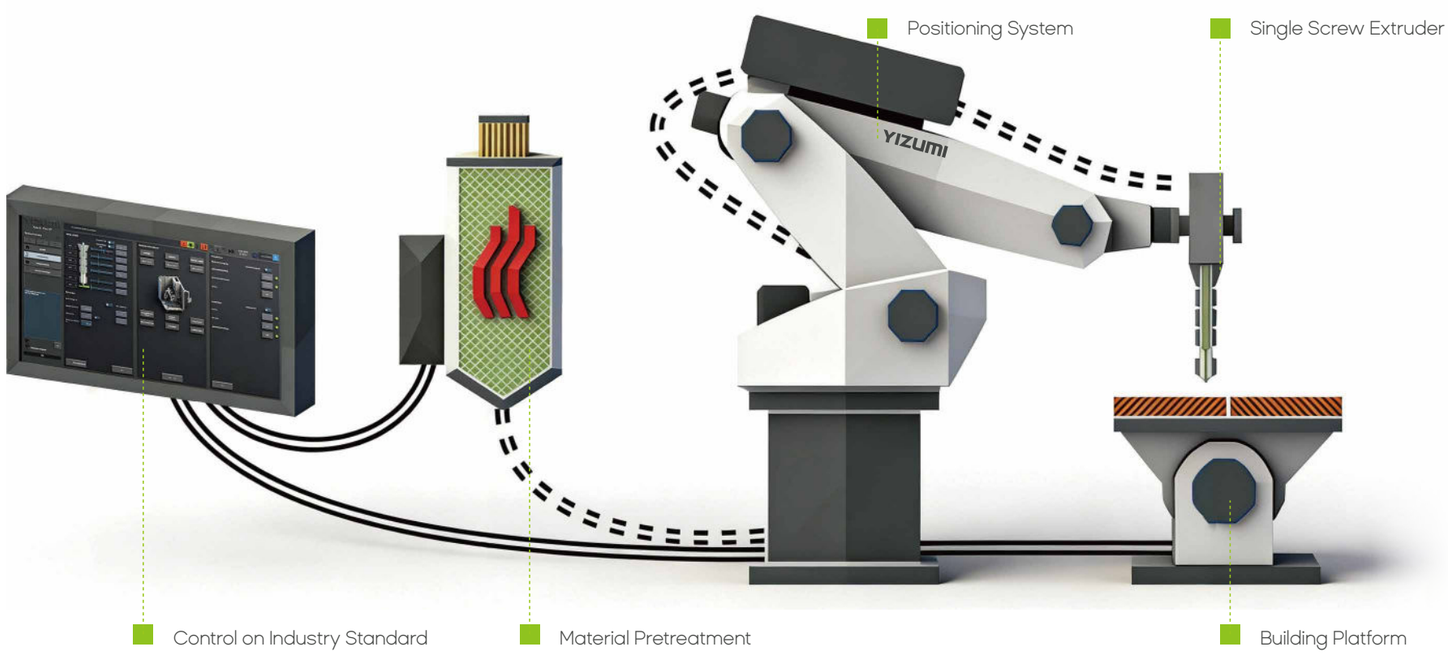

SpaceA technology is based on the layer-by-layer deposition of one molten thermoplastic. A solid component can be built up by solidifying this melt strand.

YIZUMI's SpaceA technology is based on 4 principles for economical use:

- Use of a screw extruder
- Use of a 6-axis positioning system
- Use of a high plant modularity
- Use of an industry standard control system

Best Return on Invest

Low Material Supply Costs

High Automation Potential

Low Cycle Time

SpaceA Product Overview

Positioning System

A 6-axis robotic system with positioning accuracy of 0.05 mm.

Single Screw Extruder

Most compact extruder technology with concentric feed zone and integrated drying unit.

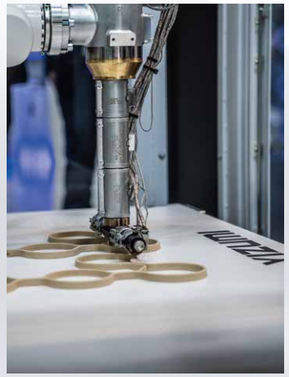

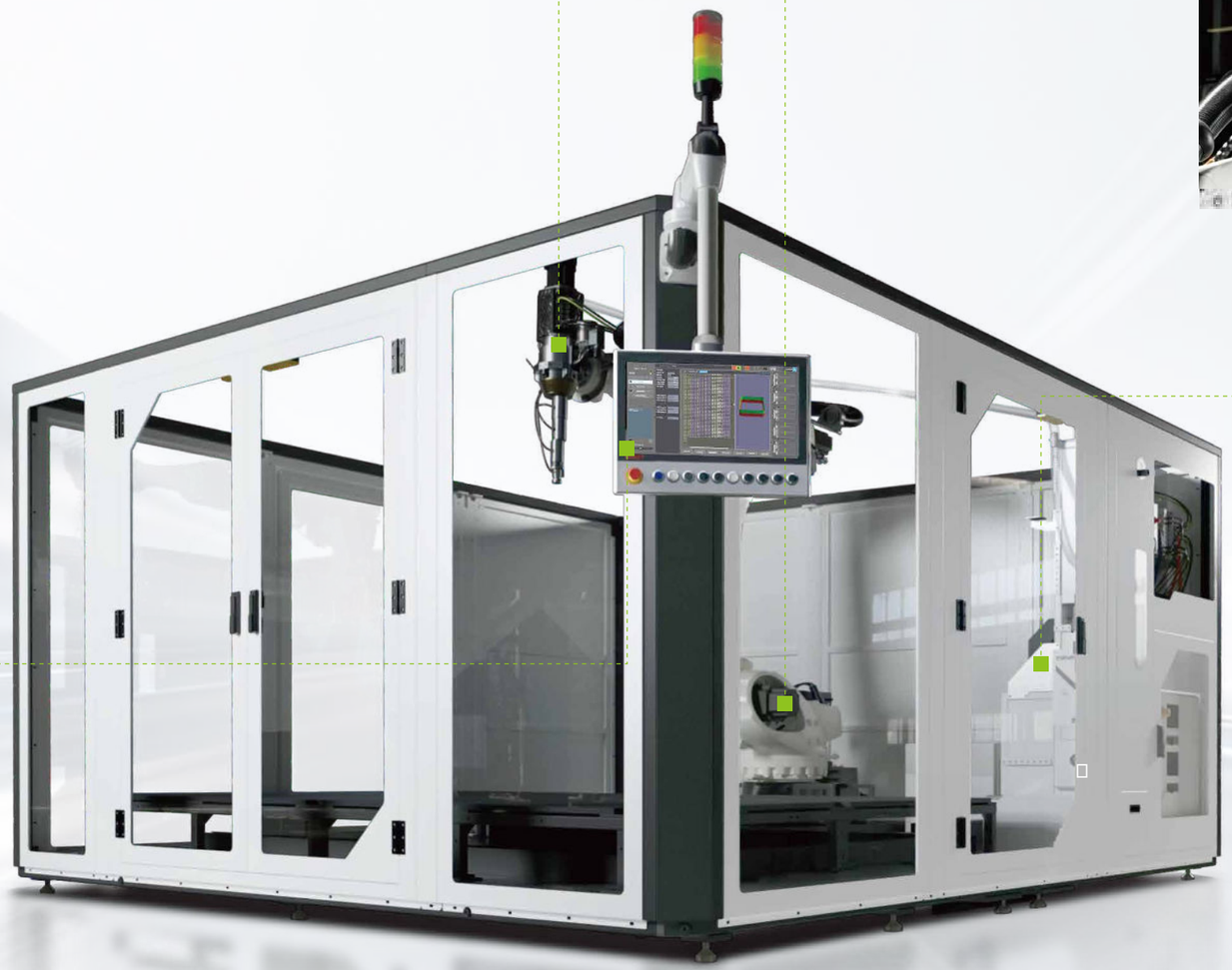

Material Drying

Integrated drying unit can achieve raw material pretreatment.

Control on Industry Standard

Higher-level control concept with many interfaces available in the standard version.

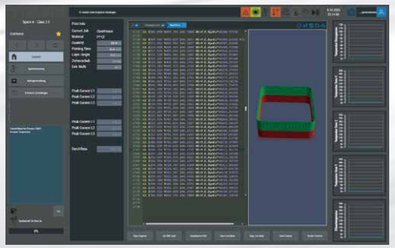

* All data presented herein were obtained under specific test conditions.
Actual performance may vary due to differences in operating conditions.
The data are for reference only and do not constitute acceptance criteria or a performance commitment.

SpaceA Product Family

SpaceA F-Line

- **Flexible all in one premium machine solution**
  Full running system with standard periphery for plastics processing and many standardised options.
- **Compact machine design for production integration**
  Perfect Part Size to Machine Size Ratio and software interfaces
- **Fast delivery**
  Machines on stock

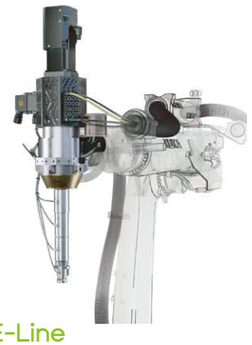

SpaceA E-Line

- **Extension for a quick start**
  Update your own existing Kuka robotic system with a Extension Pack.
- **All in one 3D process package**
  Software. Extruder. Periphery. SpaceA Control Unit.
- **Fast delivery**
  Machines on stock

SpaceA G-Line

- **Grounded all in one premium cell solution**
  Configurate new robots with SpaceA Extension Pack and many standardised options.
- **Freely accessible manufacturing cell**
  Lean design with many opportunities for various production integration.
- **Big. Bigger. G-Line**
  High Range up to 3.9 m robot arm length and linear axis integration up to 10 m and a high throughput up to 25 kg/h.

SpaceA C-Line

- **Customize your own additive manufacturing centre**
  Based on F- Line and G-Line.
- **Fully automated**
  Process controlling. Line production.
  ERP-System integration. Software interfaces.
- **Unlimited technical solutions for best ROI**
  Engineering. Service. Design. Market Know-How.

SpaceA

F-Line

Easily available | **Low cost** | **Already certified materials**

The SpaceA F-Line creates a powerful symbiosis of machine and robotic cell, forming one seam-lessly coordinated manufacturing unit. Its modular architecture allows customers to configure every element — extruder, robot, peripherals — according to their needs. Even the placement of the entire cell is fully flexible, as the F-Line can be positioned wherever the production layout requires. This freedom, combined with high throughput and precise robotic motion, delivers a future-proof solution for industrial pellet-based 3D printing.

F1

F2

F3

Less Infrastructure Demand

- 1-2 kW only
- No water needed
- < 5 t/m² floor load capacity

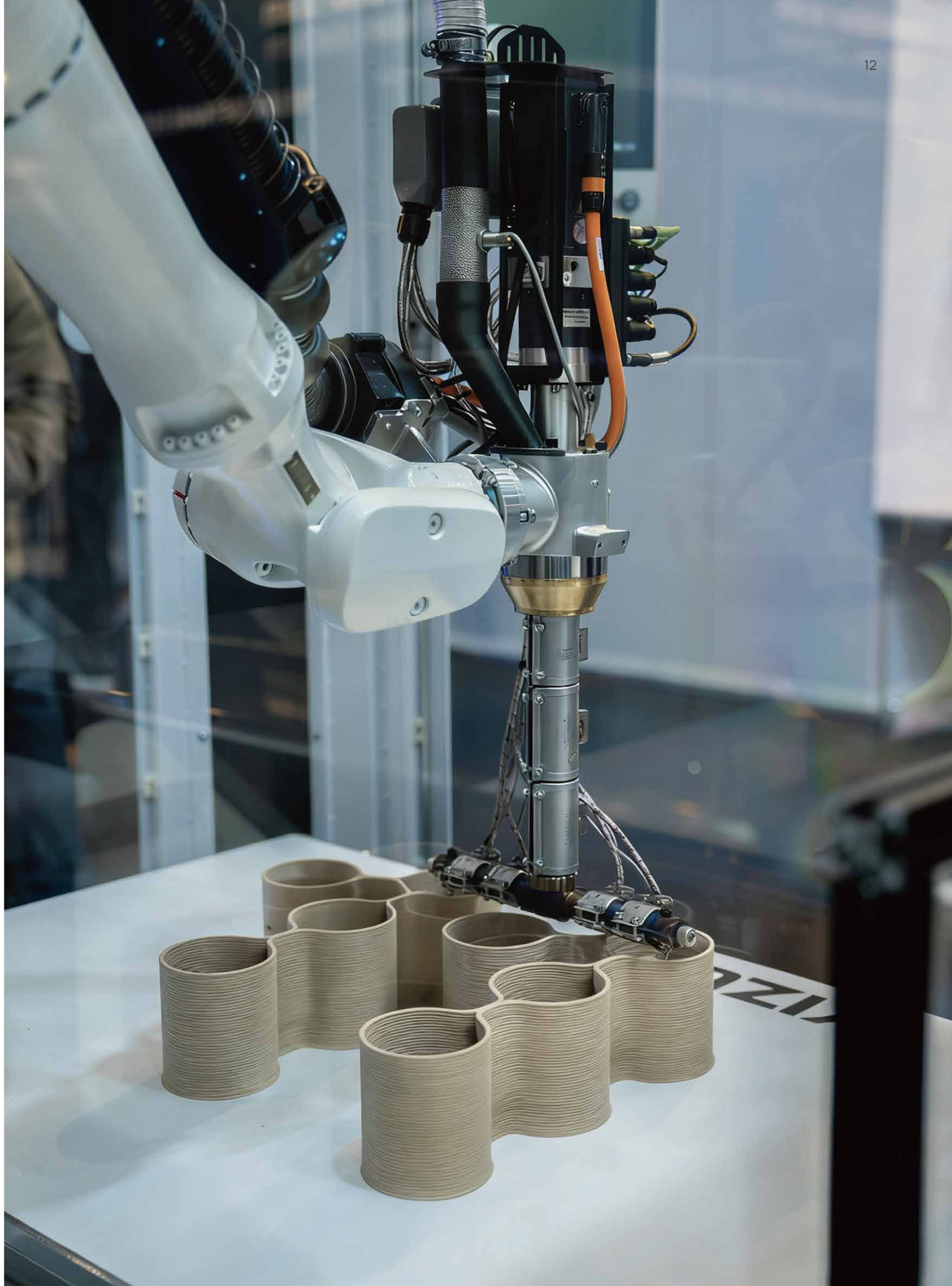

SpaceA

C&G-Line

Productivity & Economical efficiency

- High material throughput
- Low material costs
- Low machine investment
- Low energy consumption
- Best return on invest

The SpaceA G-Line is the ultimate open-format system for adjustable pellet-based 3D printing. By combining our E-Line Extruder Extension Pack with any freely selectable robotic system, the G-Line creates a fully modular production cell tailored to each customer's needs. Its open architecture allows you to choose the robot, define the working envelope, and integrate only the peripherals you require. The entire cell can be positioned wherever your layout demands, enabling true freedom in factory planning while maintaining the reliable, high-throughput performance of SpaceA pellet extrusion.

Benefits: Small Scale Production

Material Diversity

SpaceA unlocks true material freedom in industrial pellet-based 3D printing. By processing standard injection-molding pellets, the system supports an exceptionally wide range of polymers — from flexible TPUs and durable PP or PA to high-performance materials like PC, PEEK or fiber-reinforced compounds. This versatility allows engineers to select exactly the properties they need: toughness, heat resistance, flexibility or chemical stability. With SpaceA, material choice is no longer a limitation but a strategic advantage in product development and production.

- Easily available
- Low cost
- Already certified materials

Scalability

SpaceA redefines scalability in industrial pellet-based 3D printing. Its modular platform allows you to scale both build size and machine configuration freely — from compact cells for rapid iteration to large-format systems capable of printing oversized, structural components. With fully robot-driven motion and a flexible extruder setup, SpaceA adapts to any geometry: small details, long continuous paths,tall parts, or wide-format structures. Shape, size, and layoutare no longer limitations — SpaceA grows with your production needs.

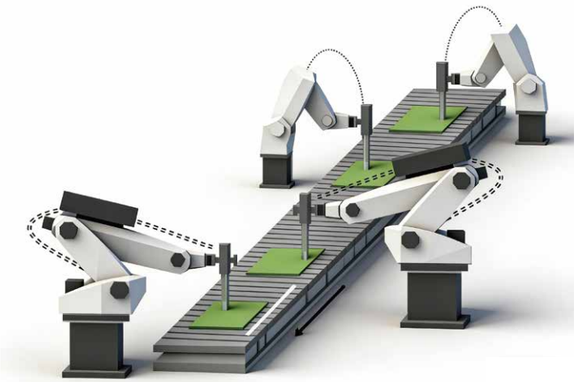

- Standard interfaces
- Consistent automation approach

High Potential of Automation

SpaceA offers outstanding automation potential, enabling fully integrated additive workflows. Its open industrial control architecture and modular hardware design allow seamless interaction with robots, conveyors, sensors or handling systems. Whether used as a standalone cell, part of a semi-automated line or a fully automated production environment, SpaceA adapts to any level of automation. This flexibility makes it ideal for scaling throughput, ensuring repeatability and enabling continuous, hands-off manufacturing.

Cost Allocation

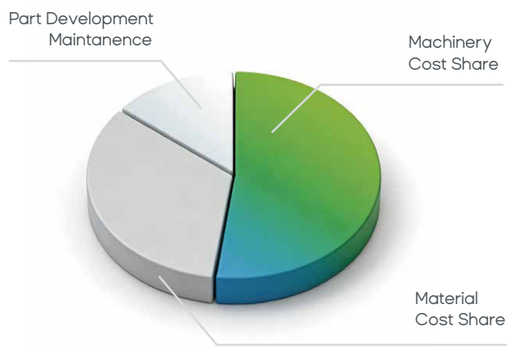

- Part cost: <8€/kg part weight

Productivity & Economical Efficiency

The high productivity of the process used is based on the physical principle of shear heating within the screw extruder used. In contrast to pure plastification via heat conduction, a scalable conveying rate independent of the thermal conductivity of the material to be processed can be achieved. Depending on the process point, the conveying rate can be increased to several kilograms per hour.

Like previous manufacturing processes, additive manufacturing plants must also be subject to the usual investment calculations. Accordingly, the plant investment must be reduced and the material output increased at the same time. Only with high ratios of absolute investment and material output per year can economic production be guaranteed in comparison to injection molding.

- High material throughput
- Low material costs
- Low machine investment

* All data presented herein were obtained under specific test conditions.
Actual performance may vary due to differences in operating conditions.
The data are for reference only and do not constitute acceptance criteria or a performance commitment.

Engineer for

SpaceA

- Direct-Multi-Axis Control with Synchronised Extruder Control
- Higher System Modularity for More Focused Solutions
- Reduced Maintenance Efforts
- Easy Safety Integration
- Increasing Ergonomics - Data Handling
- Process Set-Up
- Simplified Human-Machine Interface

Core Features

Supply Tower

Standardised power house for the whole YIZUMI Technology, including material supply, controller and fluid management.

1 MX-System & High Performance Pneumatic Valve Island

- Minimum Maintenance demand.
- Full power and air control. No VDE certificate necessary.

2 Robot Controller Bay

Space and standardised interfaces.

3 Nozzle Length Sensor and Cleaning Bay

No manual teaching any more.

4 Material Preparation

Fully controlled material supply.

Control

- Simultaneous axis control
- Fully integrated extruder control
- Holistic path planning with volumetric extrusion parameter
- Integrated material data sets
- Further live integration of periphery systems

Human-Machine Interface (HMI)

- Cleaner user interface – separated page design
- Observation functions
- Control functions
- Data management functions

High-Speed Ultra-Thin Additive Manufacturing

Material weight saving from 15 % - 35 % in every single part

Higher pace possible due to lower layer cooling time

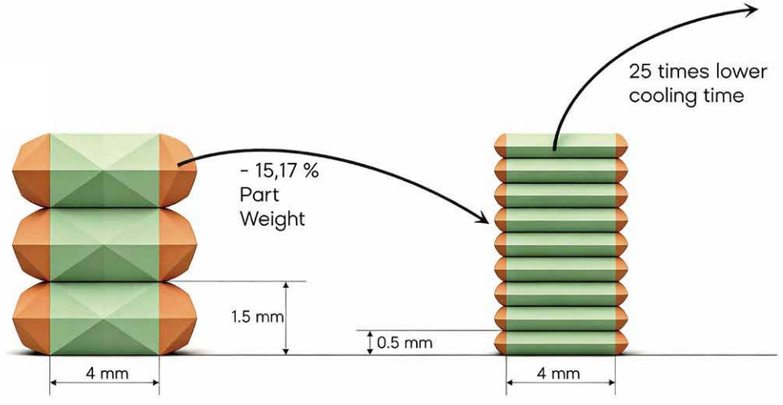

* All data presented herein were obtained under specific test conditions.
Actual performance may vary due to differences in operating conditions.
The data are for reference only and do not constitute acceptance criteria or a performance commitment.

SerenAty by SpaceA

Smart Printing. Simple Control.

One Interface, Total Clarity

Our enhanced Ease of Use Concept brings all machine functions together in one unified interface — material handling, process settings, monitoring, and system control are seamlessly integrated into single, intuitive workspace.

The result: fewer errors, faster workflows, and a clear, consistent operating experience that makes additive manufacturing more accessible than ever.

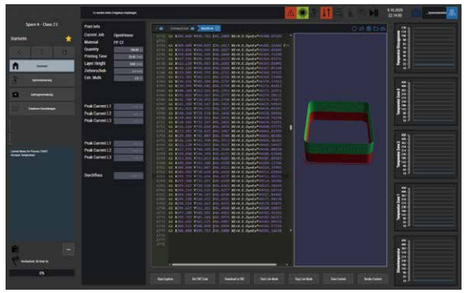

Ease Starts Here

With the SpaceA Gen2, effortless operation becomes the new standard. Even first-time users can launch a production process with just a few clicks, supported by an intuitive user flow that keeps complexity in the background.

This dramatically shortens onboarding times and ensures a smooth and confident start for new operators.

Extruder & Nozzle

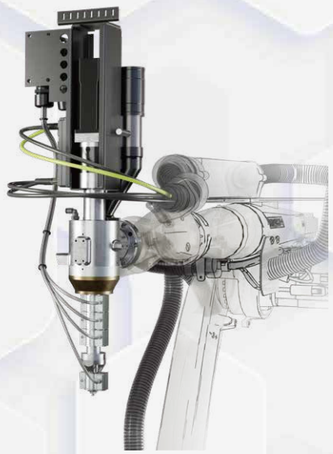

D16-Extruder

Screw Diameter:	16 mm
Heat Zones:	3
Feeding Zone:	Cooled
Nozzle:	Heated
Throughput:	up to 4.0 kg/h

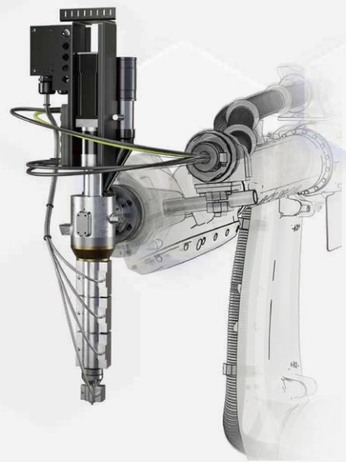

D24-Extruder

Screw Diameter:	24 mm
Heat Zones:	3
Feeding Zone:	Cooled
Nozzle:	Heated
Throughput:	up to 8.0 kg/h

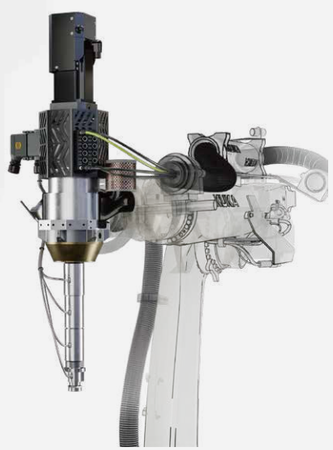

D34-Extruder

Screw Diameter:	34 mm
Heat Zones:	3
Feeding Zone:	Cooled
Nozzle:	Heated
Throughput:	up to 20.0 kg/h

SpaceA Single Nozzle – Precision Made Simple

Unlock reliable, industrial-grade 3D printing with the SpaceA Single Nozzle. Engineered for maximum stability and consistent material flow, it delivers precise components with minimal maintenance. Ideal for streamlined workflows, prototypes, and small-batch production where accuracy matters most.

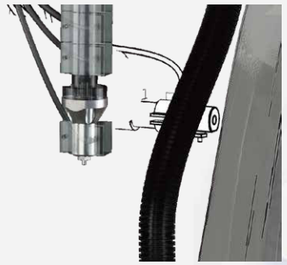

SpaceA Dual Nozzle – Twice the Power, Infinite Possibilities

The SpaceA Dual Nozzle system elevates additive manufacturing toa new level. Print complex geometries, multi-material parts, or support structures with unmatched efficiency. Faster production, greater flexibility, and superior performance — all in one powerful dual-extrusion setup.

SpaceA Nozzle Range – From Ultra-Fine to High-Output

SpaceA offers unmatched flexibility with nozzle diameters ranging from 0.5 mm to 20 mm. Whether you need ultra-precise surfacequality, robust material deposition, or high-volume output, our nozzle portfolio gives you the perfect tool for every application.

Maximum versatility. Maximum performance. One system.

* All data presented herein were obtained under specific test conditions.
Actual performance may vary due to differences in operating conditions.
The data are for reference only and do not constitute acceptance criteria or a performance commitment.

SpaceA Gen2

Configure your SpaceA like an engineer

Build a tailored SpaceA setup component-by-component

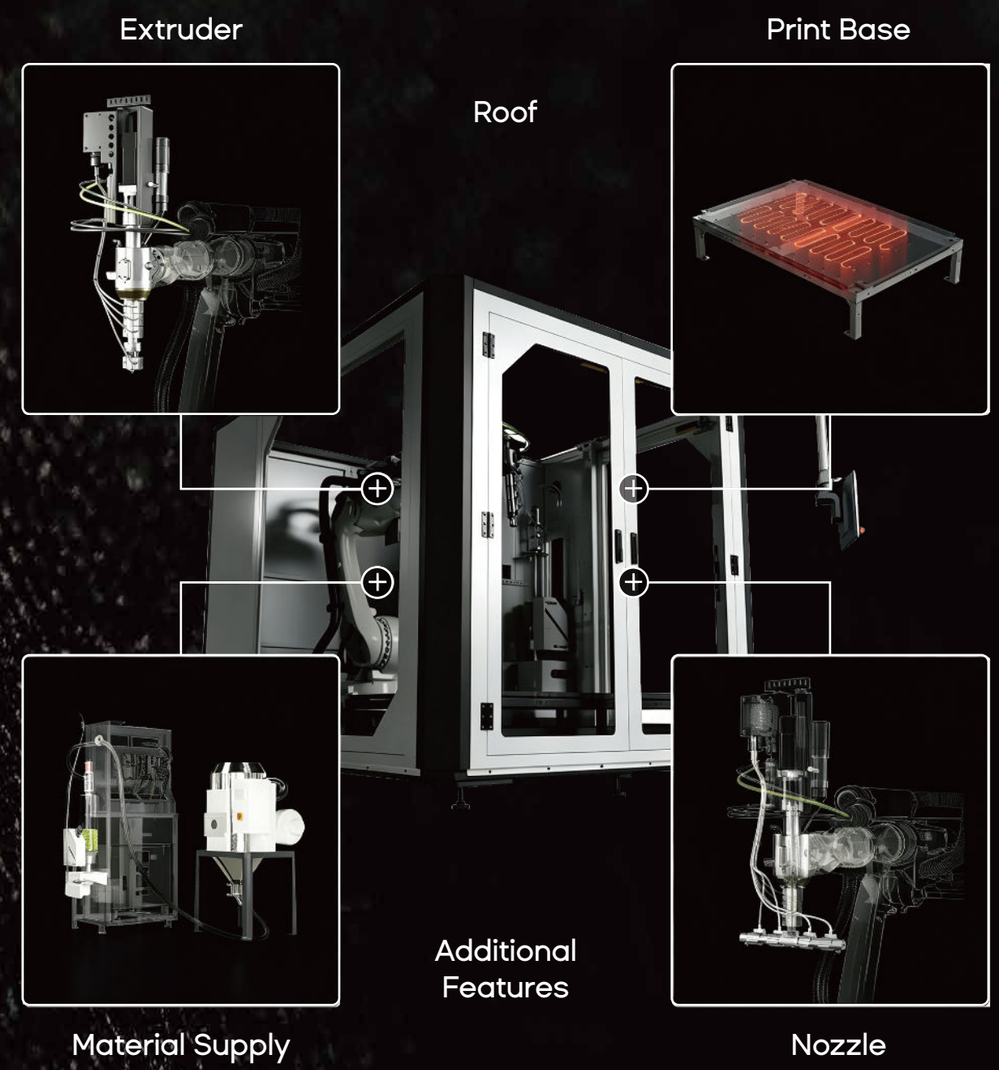

SpaceA F1.810

Specifications

ITEM	UNIT	F1 (Flexible)
Typical build volume	m³	~1
Machine dimensions	mm	1600 x 2300
Robot reach (up to)	mm	1,810
Enclosure	/	Steel
Extrusion	mm	Single-screw 16/24 mm
Feeding Rate	kg/h	3,5; 6 ; 24
Nozzle diameter	mm	0.3–5
Material capability	/	Open material policy
Max. melt temperature	°C	350
Positional accuracy (XYZ)	mm	±0.5
Movement speed	mm/s	400
OEE	%	> 98
Process control	/	Closed-loop; synchronized axes
Material handling	/	Automatic feeding; drying system included
Changeover time	min	< 30
Energy consumption	kWh/kg	0.6–0.8
Maintenance effort / year	€	150
User interface	/	18.5'' RFID User Level

*The robot work in a spherical volume. The printing part dimensions must be controlled with the robot work space.

Machine Dimensions

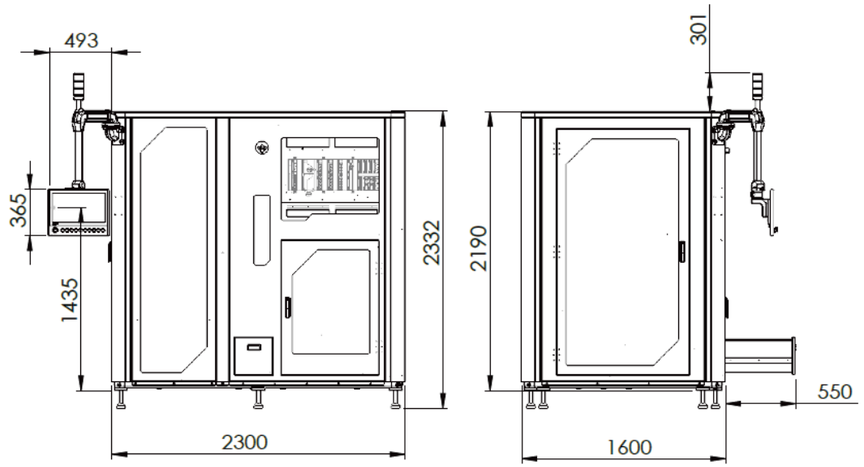

Print Bed Dimensions

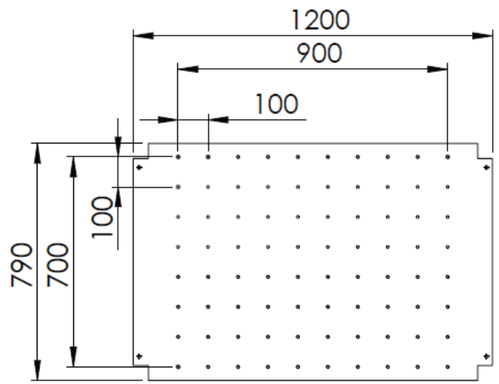

* All data presented herein were obtained under specific test conditions.
Actual performance may vary due to differences in operating conditions.
The data are for reference only and do not constitute acceptance criteria or a performance commitment.

Configure Your SpaceA F1.810

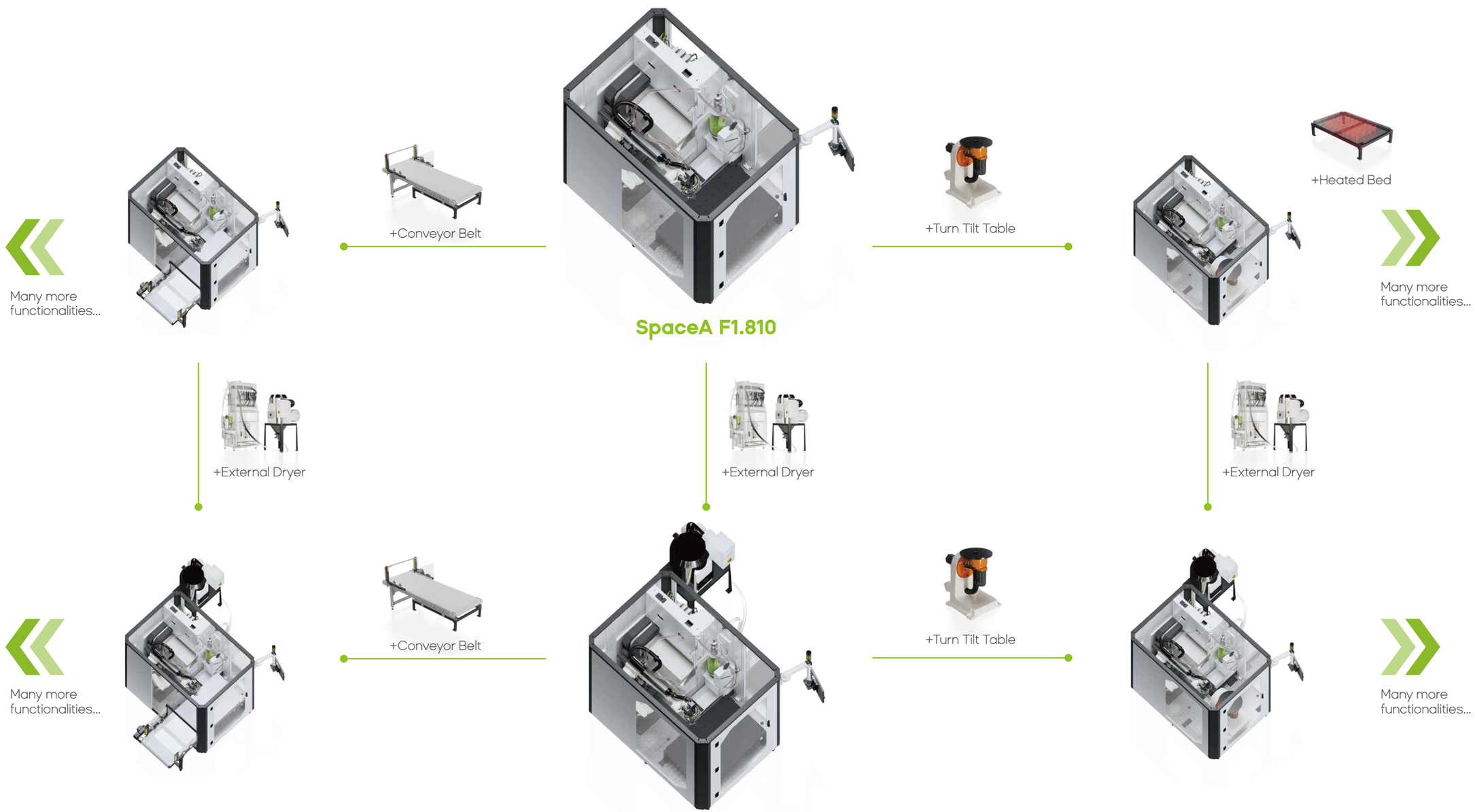

SpaceA F2.100, F2.500

Specifications

ITEM	UNIT	F2 (Flexible)
Typical build volume	m³	~3
Machine dimensions	mm	2150 x 2850
Robot reach (up to)	mm	2100 / 2500
Enclosure	/	Steel
Extrusion	mm	Single-screw 16/24 mm
Feeding Rate	kg/h	3,5; 6 ; 24
Nozzle diameter	mm	0.3–5
Material capability	/	Open material policy
Max. melt temperature	°C	350
Positional accuracy (XYZ)	mm	±0.5
Movement speed	mm/s	400
OEE	%	> 98
Process control	/	Closed-loop; synchronized axes
Material handling	/	Automatic feeding; drying system included
Changeover time	min	< 30
Energy consumption	kWh/kg	0.6–0.8
Maintenance effort / year	€	175
User interface	/	18.5" RFID User Level

*The robot work in a spherical volume. The printing part dimensions must be controlled with the robot work space.

Machine Dimensions

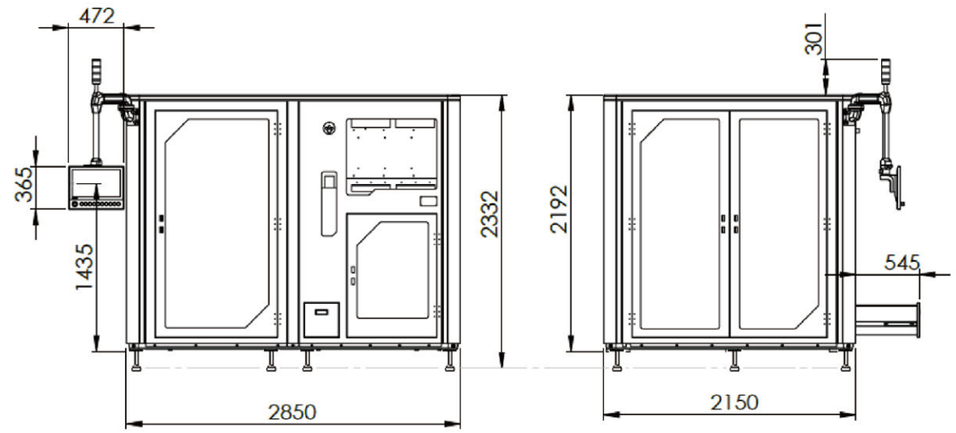

Print Bed Dimensions

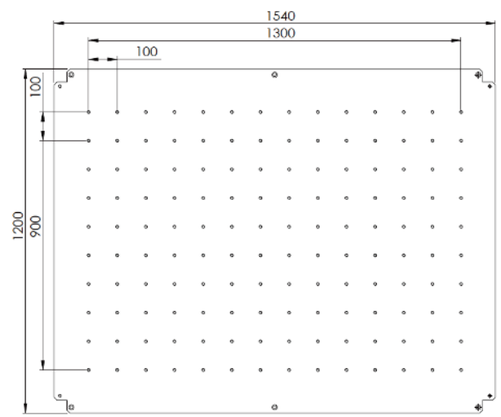

* All data presented herein were obtained under specific test conditions.
Actual performance may vary due to differences in operating conditions.
The data are for reference only and do not constitute acceptance criteria or a performance commitment.

Configure Your SpaceA F2.100, F2.500

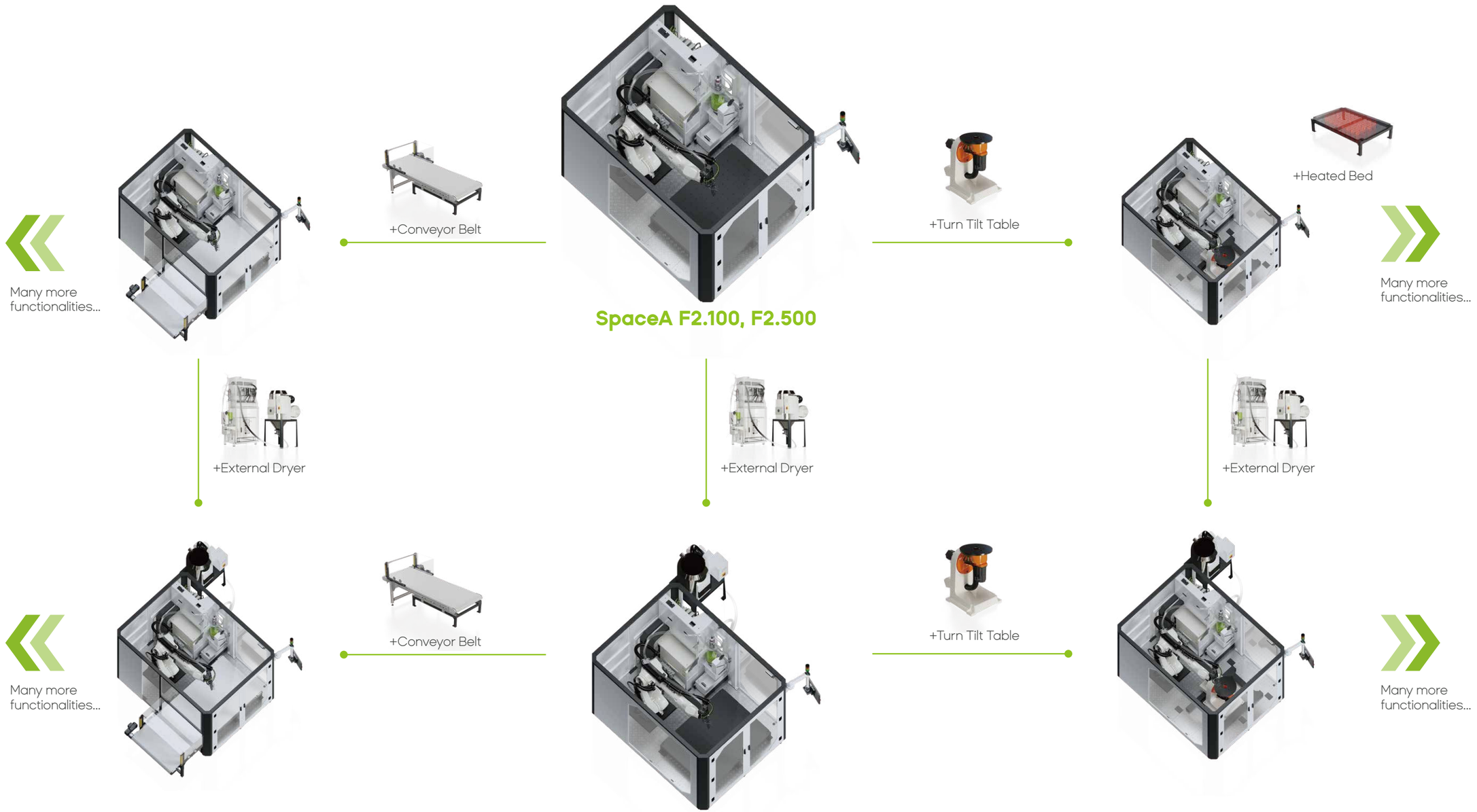

SpaceA F3.100

Specifications

ITEM	UNIT	F3 (Flexible)
Typical build volume	m³	~10
Machine dimensions	mm	4275 x 3820
Robot reach (up to)	mm	3,100
Enclosure	/	Steel
Extrusion	mm	Single-screw 16/24/34 mm
Feeding Rate	kg/h	3,5; 6 ; 24
Nozzle diameter	mm	0.3–5
Material capability	/	Open material policy
Max. melt temperature	°C	350
Positional accuracy (XYZ)	mm	±0.5
Movement speed	mm/s	400
OEE	%	> 98
Process control	/	Closed-loop; synchronized axes/conveyors
Material handling	/	Automatic feeding; drying system included
Changeover time	min	< 30
Energy consumption	kWh/kg	0.6–0.8
Maintenance effort / year	€	275
User interface	/	18.5" RFID User Level

Machine Dimensions

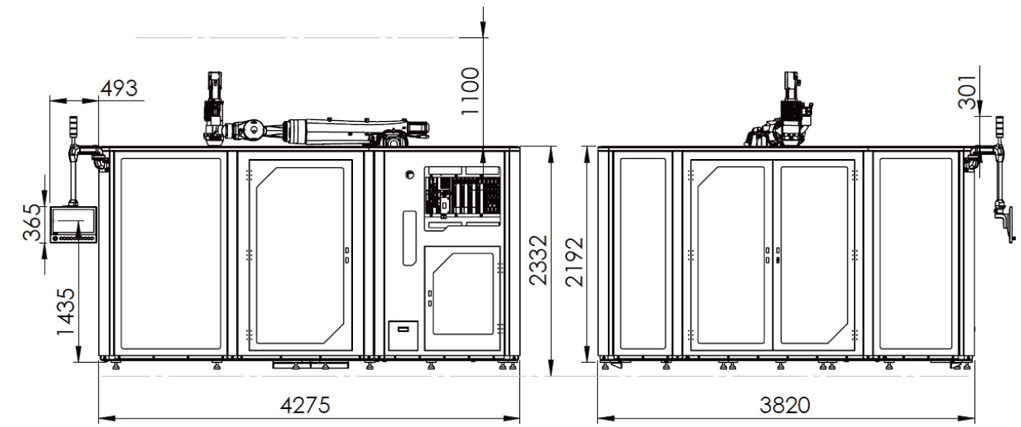

Print Bed Dimensions

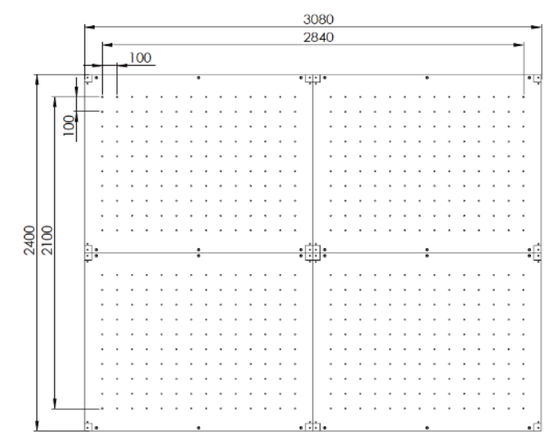

* All data presented herein were obtained under specific test conditions.
Actual performance may vary due to differences in operating conditions.
The data are for reference only and do not constitute acceptance criteria or a performance commitment.

Configure Your SpaceA F3.100

Many more functionalities...

+Turn Tilt Table

Many more functionalities...

Many more functionalities...

+External Dryer

+Conveyor Belt

Many more functionalities...

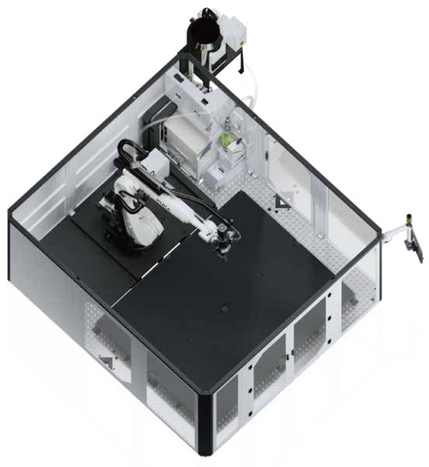

+Turn Tilt Table

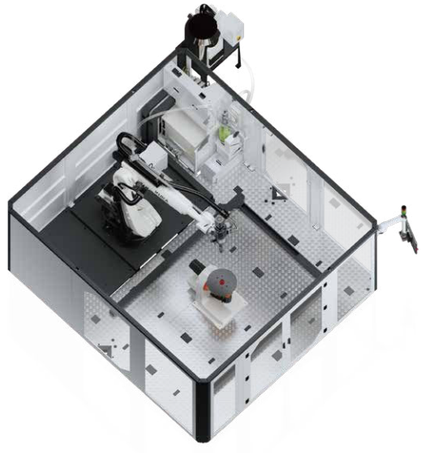

Many more functionalities...

Many more functionalities...

SpaceA G

Specifications

ITEM	UNIT	G (Grounded)
Typical build volume	m³	Unlimited
Machine dimensions	mm	Free
Robot reach (up to)	mm	3,900
Enclosure	/	Aluminum Cell
Extrusion	mm	Single-screw 16/24/34 mm
Feeding Rate	kg/h	3,5; 6 ; 24
Nozzle diameter	mm	0.3–5
Material capability	/	Open material policy
Max. melt temperature	°C	350
Positional accuracy (XYZ)	mm	±0.5
Movement speed	mm/s	400
OEE	%	> 98
Process control	/	Closed-loop
Material handling	/	Automatic feeding; drying system included
Changeover time	min	< 30
Energy consumption	kWh/kg	0.6–0.8
Maintenance effort / year	€	150
User interface	/	18.5"; offline programming; remote maintenance

Machine Dimensions

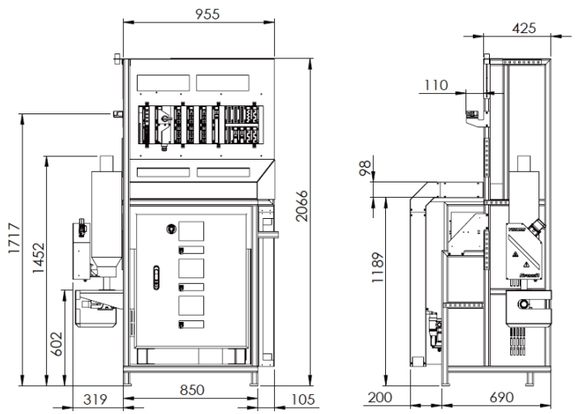

*The robot work in a spherical volume. The printing part dimensions must be controlled with the robot work space.
*The data above were acquired by testing in the factory, only for your reference.
The specific data please accord to the actual equipment

THINK
TECH FORWARD